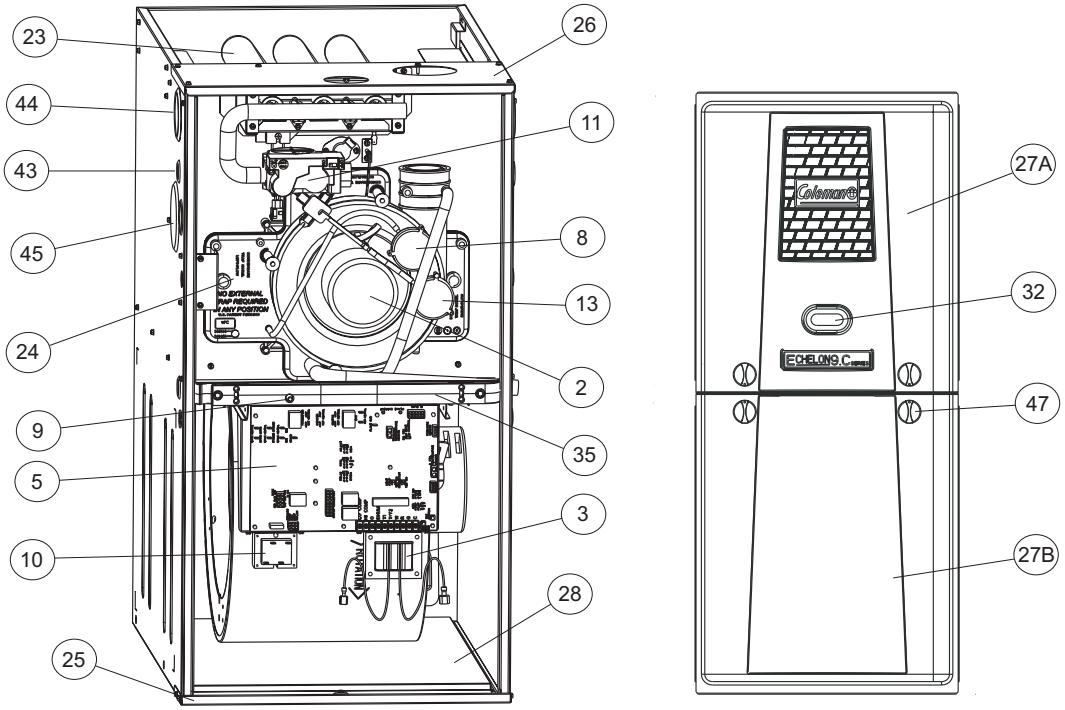

Figure 1: 97% MODULATING (ECM) MULTI-POSITION NATURAL GAS FURNACES

FIG	ITEM	DESCRIPTION	CP9C060B12MP12CA (3 BURNER)	CP9C080B12MP12CA (4 BURNER)	CP9C080C16MP12CA (4 BURNER)	
MOTOR						
2	1	MOTOR, ECM BLOWER (Complete)	S1-02435806000	S1-02435807000	S1-02435808000	
*	1A	MODULE, ECM (Programmed)	S1-32432013107	S1-32432013108	S1-32432014109	
*	1B	MOTOR, ECM (Less Module)	S1-02431940000	S1-02431940000	S1-02431941000	
1,2	2	BLOWER, COMBUSTION	S1-32642583000	S1-32642583000	S1-32642583000	
ELECTRICAL						
*	3	CHOKE KIT, ECM	---	---	S1-02435605000	
3	4	SWITCH, LIMIT(250 Deg Man Reset) (2 ea.)	S1-02541318000	S1-02541318000	S1-02541318000	
1,2	5	CONTROL, FURNACE	S1-33102984000	S1-33102984000	S1-33102984000	
3	6	IGNITER	S1-02532625000	S1-02532625000	S1-02532625000	
3	7	SENSOR, FLAME	S1-02537499000	S1-02537499000	S1-02537499000	
1,2	8	SWITCH, PRESSURE	S1-02435979000	S1-02435979000	S1-02435979000	
1,2	9	SWITCH, DOOR	S1-02435738000	S1-02435738000	S1-02435738000	
1,2	10	TRANSFORMER	S1-2940A3541	S1-2940A3541	S1-2940A3541	
1,3	11	VALVE, GAS	S1-02543257000	S1-02543257000	S1-02543257000	
2	12	CONTROL, TEMPERATURE	S1-02541336000	S1-02541321000	S1-02541321000	
1,2	13	SWITCH, PRESSURE	S1-02435978000	S1-02435978000	S1-02435978000	
2	14A	SENSOR, PRESSURE	S1-02435922000	S1-02435922000	S1-02435922000	<
2	14B	SENSOR, THERMISTOR	S1-03109199000	S1-03109199000	S1-03109199000	
AIR MOVING						
1,2	15	HOUSING, BLOWER	S1-37327824001	S1-37327824001	S1-37327824002	
2	16	WHEEL, BLOWER	S1-02619654709	S1-02619654709	S1-02619654014	
FABRICATED PARTS						
	17					
3	18	BURNER, MAIN GAS	S1-02920482000	S1-02920482000	S1-02920482000	
3	19	BRACKET, IGNITER	S1-07317403000	S1-07317403000	S1-07317403000	
2	20	SHELF, BLOWER	S1-07327823002	S1-07327823002	S1-07327823003	

NOTE: *Not Shown
New replacement parts shown in **bold** face type at the first printing of parts list dated 7/12.
Major components and suggested stocking items are shown with shaded item number.
"<" Across from row indicates a change in that row.
--- Not applicable to specified model.

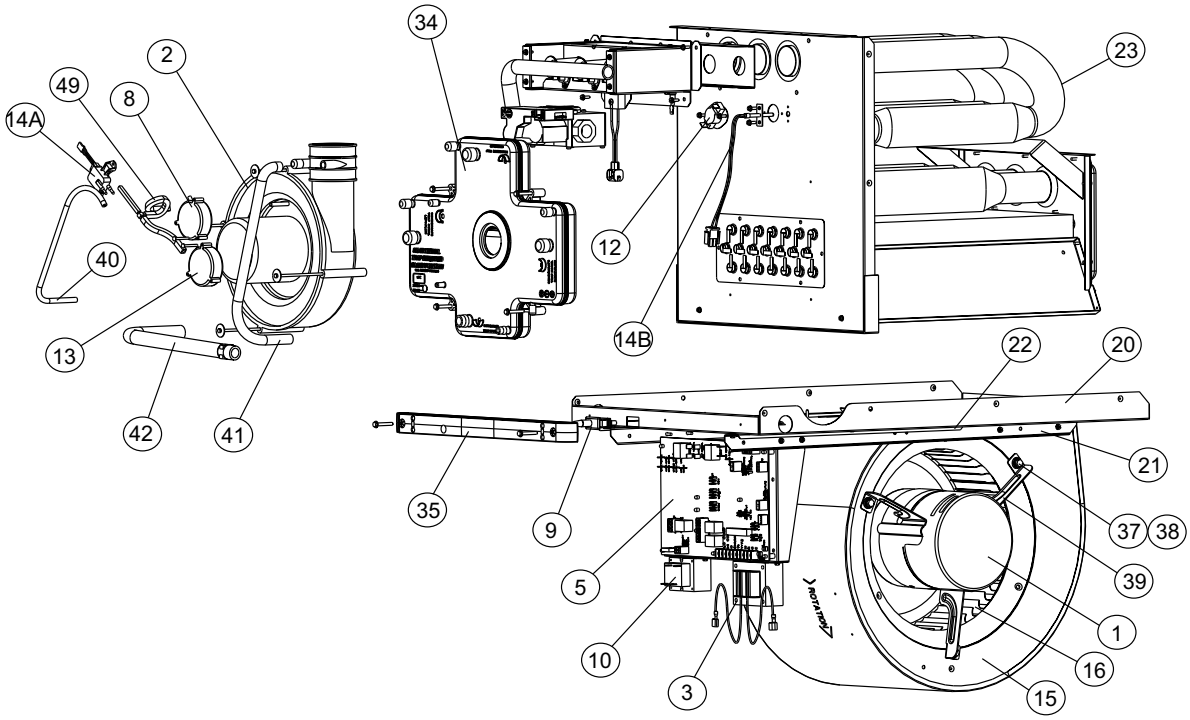

Figure 2: 97% MODULATING (ECM) MULTI-POSTION NATURAL GAS FURNACES

FIG	ITEM	DESCRIPTION	CP9C060B12MP12CA (3 BURNER)	CP9C080B12MP12CA (4 BURNER)	CP9C080C16MP12CA (4 BURNER)
FABRICATED PARTS (Continued)					
2	21	RAIL, BLOWER (2 Req'd)	S1-07327825001	S1-07327825001	S1-07327825001
2	22	BRACKET, BLOWER TRACK (2 Req'd)	S1-07327825002	S1-07327825002	S1-07327825002
1,2	23	HEAT EXCHANGER ASS'Y	S1-37327871001	S1-37327871002	S1-37327871003
3	24	MANIFOLD, GAS	S1-02924467000	S1-02924468000	S1-02924468000
1	25	PAN, BOTTOM	S1-07327841002	S1-07327841002	S1-07327841003
1	26	PANEL, TOP	S1-07327842002	S1-07327842003	S1-07327842004
1	27A	PANEL, UPPER DOOR	S1-37327850011	S1-37327850011	S1-37327850013
1	27B	PANEL, LOWER DOOR	S1-37327850012	S1-37327850012	S1-37327850014
1	28	PANEL, BLOCKOFF	S1-07327827002	S1-07327827002	S1-07327827003
	29				
	30				
MISCELLANEOUS					
3	31	ORIFICE, BURNER (Natural #45)	S1-02921182045	S1-02921182045	S1-02921182045
1	32	SIGHT GLASS, OVAL (2 Req'd)	S1-02538899000	S1-02538899000	S1-02538899000
*	33	GASKET, FOAM (Door) (per ft.)	S1-02815517000	S1-02815517000	S1-02815517000
1,2	34	PAN, CONDENSATE	S1-32816418000	S1-32816419000	S1-32816419000
1,2	35	BRACKET, DOOR	S1-02815513000	S1-02815513000	S1-02815514000
*	36	HARNESS, MAIN WIRING	S1-02543258000	S1-02543258000	S1-02543258000
2	37	FERRULE (3 Req'd)	S1-02320541000	S1-02320541000	S1-02320541000
2	38	GROMMET (3 Req'd)	S1-02814740000	S1-02814740000	S1-02814740000
2	39	MOUNT, MOTOR (Includes item 37 & 38)	S1-37319831002	S1-37319831002	S1-37319831002
2	40	TUBING, SILICON	S1-02812499000	S1-02812499000	S1-02812499000
2	41	HOSE, RAIN GUTTER	S1-02815539000	S1-02815539000	S1-02815539000
2	42	HOSE, CONDENSATE	S1-02815540000	S1-02815540000	S1-02815855000
1	43	PLUG, SEAL, 7/8"	S1-02815853000	S1-02815853000	S1-02815853000
1	44	PLUG, SEAL, 2-3/8"	S1-02815854000	S1-02815854000	S1-02815854000
1	45	PLUG, VENT PIPE	S1-02924406000	S1-02924406000	S1-02924406000
*	46	BAG, PARTS	S1-02924480000	S1-02924480000	S1-02924481000
1	47	KNOB, QUARTER TURN (4 Req'd)	S1-02924485000	S1-02924485000	S1-02924485000
*	48	PLUG, ID	S1-02541370000	S1-02541371000	S1-02541372000
2	49	ASSEMBLY, DRAIN HOSE	S1-02815874000	S1-02815874000	S1-02815874000
*	50	HARNESS, ECM CONTROL (16 Pin)	S1-02541349000	S1-02541349000	S1-02541349000
*	51	HARNESS, ECM MOTOR (5 Pin)	S1-02541460000	S1-02541460000	S1-02541460000
*	52	DIAGRAM, WIRING	531515	531515	531515

NOTE: *Not Shown
New replacement parts shown in **bold** face type at the first printing of parts list dated 7/12.
Major components and suggested stocking items are shown with shaded item number.
"<" Across from row indicates a change in that row.
--- Not applicable to specified model.

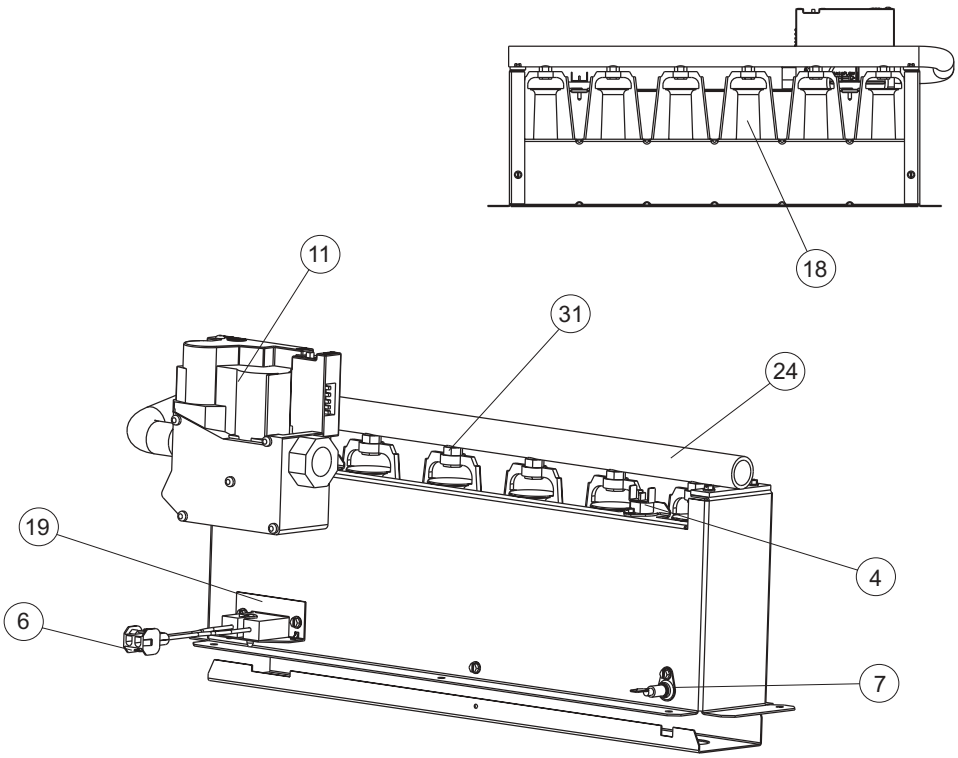

Figure 3: GAS CONTROLS

FIG	ITEM	DESCRIPTION	CP9C100C16MP12CA (5 BURNER)	CP9C100C20MP12CA (5 BURNER)	CP9C120D20MP12CA (6 BURNER)
MOTOR					
2	1	MOTOR, ECM BLOWER (Complete)	S1-02435809000	S1-02435810000	S1-02435811000
*	1A	MODULE, ECM (Programmed)	S1-32432014110	S1-32432015111	S1-32432015112
*	1B	MOTOR, ECM (Less Module)	S1-02431941000	S1-02431941000	S1-02431941000
1,2	2	BLOWER, COMBUSTION	S1-32642583000	S1-32642583000	S1-32642583000
ELECTRICAL					
*	3	CHOKE KIT, ECM	S1-02435605000	S1-02435604000	S1-02435604000
3	4	SWITCH, LIMIT (250 Deg, Man Reset) (2 ea.)	S1-02541318000	S1-02541318000	S1-02541318000
1,2	5	CONTROL, FURNACE	S1-33102984000	S1-33102984000	S1-33102984000
3	6	IGNITER	S1-02532625000	S1-02532625000	S1-02532625000
3	7	SENSOR, FLAME	S1-02537499000	S1-02537499000	S1-02537499000
1,2	8	SWITCH, PRESSURE	S1-02435979000	S1-02435979000	S1-02435979000
1,2	9	SWITCH, DOOR	S1-02435738000	S1-02435738000	S1-02435738000
1,2	10	TRANSFORMER	S1-2940A3541	S1-2940A3541	S1-2940A3541
1,3	11	VALVE, GAS	S1-02543257000	S1-02543257000	S1-02543257000
2	12	CONTROL, TEMPERATURE	S1-02541321000	S1-02541321000	S1-02541322000
1,2	13	SWITCH, PRESSURE	S1-02435978000	S1-02435978000	S1-02435978000
2	14A	SENSOR, PRESSURE	S1-02435922000	S1-02435922000	S1-02435922000 <
2	14B	SENSOR, THERMISTOR	S1-03109199000	S1-03109199000	S1-03109199000
AIR MOVING					
1,2	15	HOUSING, BLOWER	S1-37327824002	S1-37327824003	S1-37327824003
2	16	WHEEL, BLOWER	S1-02619654014	S1-02638510000	S1-02638510000

NOTE: *Not Shown
New replacement parts shown in **bold** face type at the first printing of parts list dated 7/12.
Major components and suggested stocking items are shown with shaded item number.
"<" Across from row indicates a change in that row.
--- Not applicable to specified model.

FIG	ITEM	DESCRIPTION	CP9C100C16MP12CA (5 BURNER)	CP9C100C20MP12CA (5 BURNER)	CP9C120D20MP12CA (6 BURNER)
FABRICATED PARTS					
	17				
3	18	BURNER, MAIN GAS	S1-02920482000	S1-02920482000	S1-02920482000
3	19	BRACKET, IGNITER	S1-07317403000	S1-07317403000	S1-07317403000
2	20	SHELF, BLOWER	S1-07327823003	S1-07327823004	S1-07327823005
2	21	RAIL, BLOWER (2 Req'd)	S1-07327825001	S1-07327825001	S1-07327825001
2	22	BRACKET, BLOWER TRACK (2 Req'd)	S1-07327825002	S1-07327825002	S1-07327825002
1,2	23	HEAT EXCHANGER ASS'Y	S1-37327871004	S1-37327871004	S1-37327871005
3	24	MANIFOLD, GAS	S1-02924469000	S1-02924469000	S1-02924470000
1	25	PAN, BOTTOM	S1-07327841003	S1-07327841003	S1-07327841004
1	26	PANEL, TOP	S1-07327842005	S1-07327842005	S1-07327842006
1	27A	PANEL, UPPER DOOR	S1-37327850013	S1-37327850013	S1-37327850015
1	27B	PANEL, LOWER DOOR	S1-37327850014	S1-37327850014	S1-37327850016
1	28	PANEL, BLOCKOFF	S1-07327827003	S1-07327827003	S1-07327827004
	29				
	30				
MISCELLANEOUS					
3	31	ORIFICE, BURNER (Natural #45)	S1-02921182045	S1-02921182045	S1-02921182045
1	32	SIGHT GLASS, OVAL (2 Req'd)	S1-02538899000	S1-02538899000	S1-02538899000
*	33	GASKET, FOAM (Door) (per ft.)	S1-02815517000	S1-02815517000	S1-02815517000
1,2	34	PAN, CONDENSATE	S1-32816420000	S1-32816420000	S1-32816422000
1,2	35	BRACKET, DOOR	S1-02815514000	S1-02815514000	S1-02815515000
*	36	HARNESS, MAIN WIRING	S1-02543258000	S1-02543258000	S1-02543258000
2	37	FERRULE (3 Req'd)	S1-02320541000	S1-02320541000	S1-02320541000
2	38	GROMMET (3 Req'd)	S1-02814740000	S1-02814740000	S1-02814740000
2	39	MOUNT, MOTOR (Includes item 37 & 38)	S1-37319831002	S1-37319831002	S1-37319831002
2	40	TUBING, SILICON	S1-02812499000	S1-02812499000	S1-02812499000
2	41	HOSE, RAIN GUTTER	S1-02815539000	S1-02815539000	S1-02815539000
2	42	HOSE, CONDENSATE	S1-02815856000	S1-02815856000	S1-02815857000
1	43	PLUG, SEAL, 7/8"	S1-02815853000	S1-02815853000	S1-02815853000
1	44	PLUG, SEAL, 2-3/8"	S1-02815854000	S1-02815854000	S1-02815854000
1	45	PLUG, VENT PIPE	S1-02924406000	S1-02924406000	S1-02924406000
*	46	BAG, PARTS	S1-02924481000	S1-02924481000	S1-02924481000
1	47	KNOB, QUARTER TURN (4 Req'd)	S1-02924485000	S1-02924485000	S1-02924485000
*	48	PLUG, ID	S1-02541373000	S1-02541374000	S1-02541375000
2	49	ASSEMBLY, DRAIN HOSE	S1-02815874000	S1-02815874000	S1-02815874000
*	50	HARNESS, ECM CONTROL (16 Pin)	S1-02541349000	S1-02541349000	S1-02541349000
*	51	HARNESS, ECM MOTOR (5 Pin)	S1-02541460000	S1-02541460000	S1-02541460000
*	52	DIAGRAM, WIRING	531515	531515	531515

NOTE: *Not Shown
New replacement parts shown in **bold** face type at the first printing of parts list dated 7/12.
Major components and suggested stocking items are shown with shaded item number.
"<" Across from row indicates a change in that row.
--- Not applicable to specified model.

TO ORDER AUTHORIZED FACTORY REPLACEMENT PARTS - Contact your Source1 HVAC Parts Distributor or visit our website at **www.Source1Parts.com** for a Distributor and Dealer listing.

Subject to change without notice. Published in U.S.A.
Copyright © 2012 by Johnson Controls, Inc. All rights reserved.

035-22757-001 Rev. H (0712)
Supersedes: 035-22757-001 Rev. G (0312)

Johnson Controls Unitary Products
5005 York Drive
Norman, OK 73069